Instruction Manual

KYORITSU ELECTRICAL INSTRUMENTS WORKS, LTD.

K3132

250V / 500V / 1000V Analogue Insulation Tester

CONTENTS

1. Safety warning 1
2. Features 5
3. Specifications 6
4. Instrument Layout 9
5. Preparation for measurement 11
   5-1 Mechanical Zero Adjustment 11
   5-2 Battery Voltage Check 11
   5-3 Test Probe Connection 11
   5-4 Test Probe check 11
6. Measurement 12
   6-1 AC Voltage Warning Function 12
   6-2 Insulation Resistance Measurement 13
   6-3 Continuity Testing (Resistance Tests) 16
7. Battery & Fuse Replacement 18
   7-1 Battery Replacement 18
   7-2 Fuse Replacement 18
8. Notes on Accessories 19
   8-1 Case Lid 19
   8-2 How to Fit Strap Belt & Test Probe Pouch 19
9. Cleaning of the Instrument 20
10. Service 20

1. Safety warnings

This instrument has been designed, manufactured and tested according to IEC 61010: Safety requirements for Electronic measuring apparatus, and delivered in the best condition after passed the inspection. This instruction manual contains warnings and safety rules which must be observed by the user to ensure safe operation of the instrument and retain it in safe condition. Therefore, read through these operating instructions before using the instrument.

⚠ WARNING

- Read through and understand instructions contained in this manual before starting to use the instrument.
- Save and keep the manual at hand to enable quick reference whenever necessary.
- The instrument is to be used only in its intended applications.
- Understand and follow all safety instructions contained in the manual.

Failure to follow the instructions may cause injury, instrument damage and/or damage to equipment under test. MAJOR TECH is by no means liable for any damage resulting from the instrument in contradiction to this cautionary note.

The symbol ⚠ indicated on the instrument means that the user must refer to related parts in the manual for safe operation of the instrument. It is essential to read the instructions wherever the symbol appears in the manual.

⚠ **DANGER** is reserved for conditions and actions that are likely to cause serious or fatal injury.

⚠ **WARNING** is reserved for conditions and actions that can cause serious or fatal injury.

⚠ **CAUTION** is reserved for conditions and actions that can cause injury or instrument damage.

⚠ DANGER

- Never make measurement on the circuit in which electrical potential to ground over 600V exists.
- Do not attempt to make measurement in the presence of flammable gasses. Otherwise, the use of the instrument may cause sparking, which can lead to an explosion.
- Never attempt to use the instrument if its surface or your hand is wet.
- Be careful not to short-circuit the power line with the metal part of the test leads when measuring voltage. It may cause personal injury.
- Do not exceed the maximum allowable input of any measurement range.
- Do not press the Test button with test leads connected to the instrument.
- Never open the battery compartment cover while making a measurement.
- The instrument should be used only in its intended applications or conditions. Otherwise, safety functions equipped with the instrument do not work, and instrument damage or serious personal injury may be caused.
- Verify proper operation on a known source before use or taking action as a result indication of the instrument.
- Keep your fingers and hands behind the protective fingerguard during measurement.

⚠ WARNING

- Never attempt to make any measurement, if the instrument has any structural abnormality such as cracked case and exposed metal part.
- Stop using the test lead if the outer jacket is damaged and the inner metal or color jacket is exposed.
- Do not rotate the Range switch with the test leads connected to the equipment under test.
- Do not install substitute parts or make any modification to the instrument. Return the instrument to your local MAJOR TECH distributor for repair or re-calibration.
- Do not try to replace the batteries if the surface of the instrument is wet.
- Firmly insert the plug into the terminal when using test leads.
- Ensure that the instrument is powered off when opening the battery compartment cover for battery replacement.

⚠ CAUTION

- Be sure to set the function selector switch to the "OFF" position after use. When the instrument will not be in use for a long period of time, place it in storage after removing the battery.
- Do not expose the instrument to the direct sun, high temperature and humidity or dewfall.
- Use a cloth dipped in alcohol for cleaning the test leads and the part around the measuring terminals.
- Do not store the instrument if it is wet.
- The Voltage warning mark is being displayed during a measurement and it flashes when voltages 30V(DC/AC) or more exist on the circuit under test.
- Always make sure to insert each plug of the test leads fully into the appropriate terminal on the instrument.
- This instrument isn't dust & water proofed. Keep away from dust and water.

Please refer to following explanation of the symbols used on the instrument and in this manual.

⚠	User must refer to the explanation in the instruction manual.
⚠	Danger of possible electric shock
⧈	Instrument with double or reinforced insulation
⏚	Earth terminal
⚠ >440V	Protection against wrong connection is to 440V
	Crossed-out wheel bin symbol (according to WEEE Directive: 2002/96/EC) indicating that this electrical product may not be treated as household waste, but that it must be collected and treated separately.

Measurement categories(Over-voltage categories)

To ensure safe operation of measuring instruments, IEC 61010 establishes safety standards for various electrical environments, categorized as o to CAT IV, and called measurement categories.

Higher-numbered categories correspond to electrical environments with greater momentary energy. So a measuring instrument designed for CAT III environments can endure greater momentary energy than one designed for CAT II.

O(None, Other)	: Circuits which are not directly connected to the mains power supply.
CAT II	: Primary electrical circuits of equipment connected to an AC electrical outlet by a power cord.
CAT III	: Primary electrical circuits of the equipment connected directly to the distribution panel, and feeders from the distribution panel to outlets.
CAT IV	: The circuit from the service drop to the service entrance, and to the power meter and primary overcurrent protection device (distribution panel).

2. Feature

MODEL K3132A is a microcomputer controlled, high voltage insulation resistance tester with 4-range for measuring insulation resistance.

- Designed to following safety standards:
  IEC 61010-1 (CAT III 600V Pollution degree 2)
  IEC 61010-2-030
  IEC 61010-031
  IEC 61557-1, -2, -4
- Dust and drip proof construction to IP54.
- Three insulation test ranges : 250V/100MΩ,500V/200MΩ,1000V/400MΩ
- To continuity test ranges : 3Ω,500Ω
- AC voltage warning measurement can be made on all ranges without depressing the test button.
- Easy for battery check.
- When the test button is released any charge stored in the circuit under test is automatically discharged.
- Remaining electric charges can be observed on AC voltage warning range.
- LIVE circuit audible and visual indication.
- Fuse protected.
- Color coded scales and range switch position for easy reading.
- Uses only 6 x 1.5V battery type R6P, 1.5V AA or equivalent.

3. Specifications

● Measuring range and accuracy (at 23±5Cº, relative humidity 45-75%)

○ Insulation Resistance Ranges: (IEC 61557-2)

Normal output Voltage	250V	500V	1000V
Measuring Range	0 – 100MΩ	0 – 200MΩ	0 – 400MΩ
Open-Circuit Voltage	Rated test voltage +20%, -0%		
Normal current	1mA DC +20%, -0%		
Short-Circuit Current	About 1.3mA DC		
Accuracy guaranteed Range	0.1–10MΩ	0.2–20MΩ	0.4–40MΩ
Accuracy	±5% rdg at Accuracy guaranteed ranges ±0.7% of scale length at ranges other than above ranges		

○Continuity Test (Resistance Test) Ranges: (IEC 61557-4)

Ranges	3Ω	500Ω
Open-Circuit Voltage	About 4.1V DC	
Measuring current	Greater than 200mA	
Accuracy	±0.7% of scale length at other measuring ranges	

Operating error

Insulation Resistance Ranges: (IEC 61557-2)

Ranges	Measuring ranges to keep operating error	Maximum percentage operating error
250V/100 MΩ	0.1–10MΩ	±30%
500V/200 MΩ	0.2–20MΩ	
1000V/400 MΩ	0.4–40MΩ	

Continuity Test (Resistance Test) Ranges: (IEC 61557-4)

Ranges	Measuring ranges to keep operating error	Maximum percentage operating error
3Ω	0.2Ω–3Ω	±30%

The influencing variations used for calculating the operating error are denoted as follows:

Temperature : 0C° and 35 C°
Supply voltage : 6.4V to 10.4V
Position : Reference position ±90°
※Prior to measurement, apply 0-Adjutment at each position.

○AC Voltage Warning:

Warning range	0-600V
Accuracy	±5% of scale length
Input impedance	1.2MΩ

● Typical Number of measurements (Central tendency for supply voltage up to 6.0V)

Insulation Resistance Ranges:

1MΩ at 1000V Ranges Approx. 1,400 times min.
0.5MΩ at 500V Ranges Approx. 3,500 times min.
0.25MΩ at 250V Ranges Approx. 5,500 times min.

Continuity Test (Resistance Test) Ranges:

1Ω at 3Ω Range Approx. 1,500 times min.

- Applicable Standards

  IEC 61010-1, -2-030 Measurement voltage CAT III 600V
  Pollution Degree 2

  IEC 61010-031

  IEC 61557-1,-2,-4

  IEC 61326-1, 2-2 EMC

  IEC 60529 (IP54) Dust and drip proof

  EN 50581 RoHS

- Location for use : Altitude 2000m or less, Indoor use

- Operating Temperature & Humidity:
  0 - 40Cº, relative humidity up to 85%

- Strong Temperature & Humidity:
  -10 - 50Cº, relative humidity up to 75%

- Insulation Resistance: More than 50MΩ at 1000V DC between electrical circuit and housing case

- Withstand Voltage: 5160V AC for five seconds between electrical circuit and housing case.

- Overload Protection Insulation resistance ranges:

  1000V Range 1200V (DC+AC p-p) for 10 seconds

  500V Range 600V (DC+AC p-p) for 10 seconds

  250V Range 300V (DC+AC p-p) for 10 seconds

  Continuity ranges:

  3Ω/500Ω Range 280V (DC+AC p-p) for 10 seconds

  AC Voltage Warning:

  1200V (DC+AC p-p) for 10 seconds

- Dimensions: 106(L) x 160(W) x 72(D) mm approx..

- Weight: 560g approx. (Including batteries)

- Power Source: 6 x 1.5V battery type R6P, 1.5V AA or equivalent

- Accessories:

Test Probe MODEL7122B	x 1 set
Pouch for test probe	x 1
Shoulder strap	x 1
R6P batteries	x 6
Spare fuse F500mA/600V	x 1
Instruction manual	x 1

4. Instrument layout

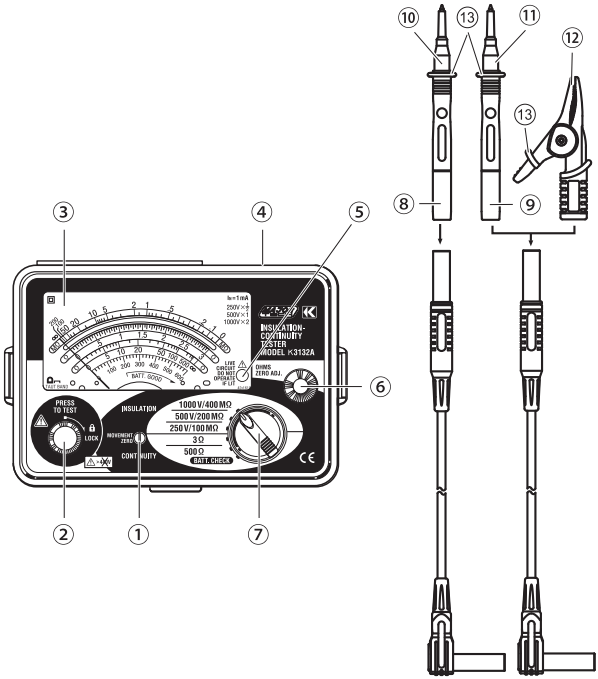

①Meter movement zero adjust
②Test button
③Scale plate
④Input connector
⑤LIVE circuit lamp
⑥OHMS zero adjust
⑦Range selector switch
⑧Test probe (Red) LINE probe
⑨Test probe (Black) EIRTH probe
⑩Test probe cap (Red)
⑪Test probe cap (Black)
⑫Alligator clip (Black)
⑬Protective fingerguard

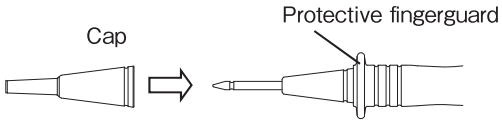

Protective fingerguard：
It is a part providing protection against electrical shock and ensuring the minimum required air and creepage distances.

Cap：
Uncapped condition for CAT II environment
Capped condition for CAT III/ IV environments
The Cap should be firmly attached to the probes.

Choose and use the test leads and caps that are suitable for the measurement category.
When the instrument and the test lead are combined and used together, whichever lower category either of them belongs to will be applied.

5. Preparation for measurement

5-1 Mechanical Zero Adjustment

Check that the pointer lines up with the middle of the mark on the scale correctly.

If not, adjust it by rotating the meter movement zero adjust with a screwdriver, etc.

5-2 Battery Voltage Check

①Set the range selector switch to BATT. CHECK position.

②Press the test button.

③Then the pointer deflects. Judge the battery status with BATT.GOOD mark on the scale plate.

If the pointer does not move to BATT.GOOD mark, the batteries are exhausted. Replace them with new batteries according to section 8 for battery & fuse replacement.

5-3 Test Probe Connection

Insert the test probe fully into the terminal of the instrument.

Connect the earth clip of the test probe (black) to EARTH terminal and the line probe (red) to LINE terminal of the connector terminal.

5-4 Test Probe Check

Set the range selector switch to 3Ω position and press and turn the test button to lock it down.

When the test probe are connected together, the pointer should move from the position towards the 0 position on the blue ohms scale. If not, the probe or fuse may be faulty.

Release the test button after completion.

⚠ WARNING

- When the test button is pressed with the range selector switch in the megaohm range position, take care not to touch the tip or the test probe where a high voltage is present in order to avoid possible shock hazard.
- Stop using the test lead if the outer jacket is damaged and the inner metal or color jacket is exposed.

⚠ CAUTION

- Do not keep the test button pressed or locked by turning it clockwise during battery check.

6. Measurement

6-1 AC Voltage Warning Function

⚠ DANGER

- Never open the battery compartment cover when making measurement.
- Verify proper operation on a known source before use or taking action as a result indication of the instrument.
- Keep your fingers and hands behind the protective fingerguard during measurement.

⚠ CAUTION

- Never press the test button if the live circuit warning lamp is lit or the warning buzzer sounds. This may damage the circuit.

Voltage check can be made which the range selector switch at any position.

① The presence of AC voltage can be detected. This function operates automatically when the test button is not depressed, I, e., in the up position,
Note : This tester has not been designed to indicate the presence of an external DC voltage.

② Connector the earth clip of the test probe (black) to the EARTH and line probe (red) to the LINE side of the circuit under test.

③ Take th reading on the AC voltage scale.

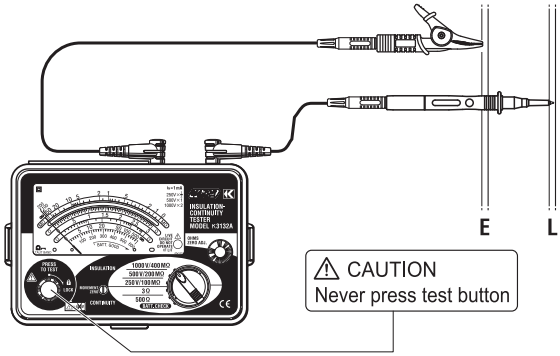

6-2 Insulation Resistance Measurement

⚠ DANGER

- Always test the circuit of equipment to ensure it is surely de-energized before measurement according to the instruction of 6-1.
- Never make measurement on a circuit in which earth potential of 600V or higher exist.
- Never open the battery compartment cover when making measurement.
- Keep your fingers and hands behind the protective fingerguard during measurement.
- Never attempt to use the instrument if its surface or your hand is wet.
- Connect the Earth cord (black) to the Earth terminal of the circuit under test.

① Check the voltage which can be applied to the circuit under test and set the range selector switch to the designed nominal output voltage range.
② Connect the earth clip of test probe (black) to the earth terminal of the circuit under test.
③ Put the tip of the line probe (red) to the circuit under test.

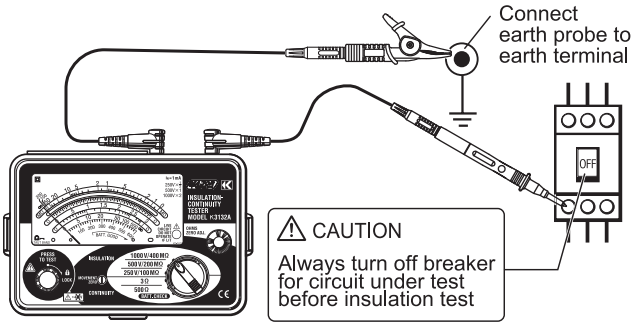

④ Check the circuit under test is not energized as follows.
Connect the test probe to the circuit under test and read a voltage value. If the circuit is live, the meter indicates the voltage, the live circuit lamp is lit, and warning buzzer sounds.
If the meter indicates 0V, the circuit is dead.

⑤ Press test button, Read the scale directly for the 500V range, multiply by 0.5 for 250V and by 2 for 1000V.

● Continuous Measurement

A lock down feature is incorporated on the test button. Pressing and turning it clockwise, lock the test button in the continuous operating position.

To release the lock turn the test button counterclockwise.
Never leave the test button locked down when not is use.

⚠ DANGER

Be extremely careful not to get electric shock during insulation resistance measurement as high voltage is present on the tip of the test probe continuously.

⑥ With the test probe still connected to the circuit under test after testing, release the test button to discharge capacitance in the circuit.

● Automatic Circuit Capacitance Discharge Function

This function allows the capacitance stored in the circuit under test to be automatically discharged after testing.
Discharge can be monitored by the voltage warning range.

⚠ DANGER

Do not touch the circuit under test immediately after testing.
Capacitance stored in the circuit may cause electric shock.
Leave the test probe connected to the circuit and never touch the circuit until the discharge is completed.

● Output voltage characteristics

The insulation resistance tester must be capable of maintaining the required test voltage when providing a steady atate current of 1mA.
0.5MΩ for the 500V test and 1MΩ for the 1000V test.

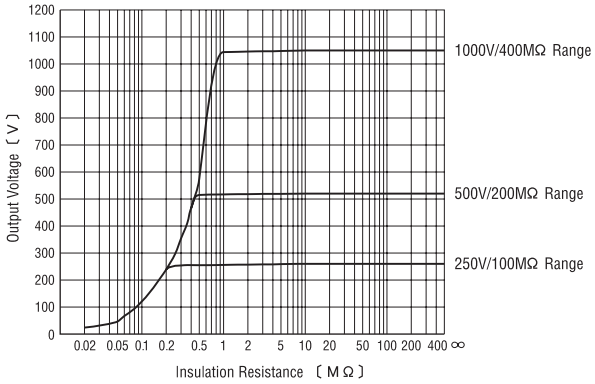

● Principle of Insulation Resistance Measurement

Resistance value can be obtained by applying a Certain high voltage to the resistance (insulation resistance) and measuring the flowing current.

Resistance Value = Voltage / Current

RX = V / I

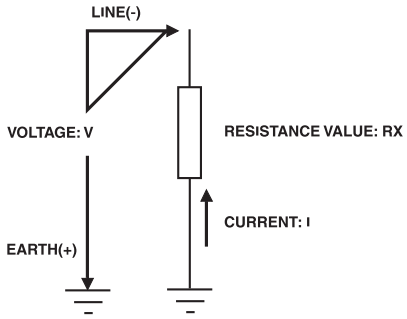

6-3 Continuity Testing (Resistance Tests)

⚠ DANGER

- Always test the circuit of equipment to ensure it is surely de-energized before measurement according to the instruction of 6-1.
- To avoid electrical shock, measurements must be performed on deenergized circuits only.
- Never open the battery compartment cover when making measurement.

⚠ CAUTION

- Never press the test button if the live circuit warning lamp is lit or the warning buzzer sounds. This may damage the circuit.
- In case that an additional operating circuit connected in parallel to the circuit under measurement, the measurement error might be caused due to the effects of impedance of the circuit connected in parallel or transient current.

① Set the range selector switch to the desired position 3 (or 500).

② Short the line probe (red) and the earth clip of the test probe (black) and press the test button. Adjust the ohm zero adjust to zero the pointer on the scale.

③ Connect the test probes to the circuit under test.

④ Check the circuit under test is not energized as follows.
Connect the test probe to the circuit under test a voltage value.
If the circuit is live, the meter indicates the voltage, the live circuit lamp is lit, and warning buzzer sounds, If the meter indicates 0V, the circuit is dead.

⑤ Press test button. Read the blue ohm scale directly.

●Continuous Measurement

A lock down feature is incorporated on the test button.
Pressing and turning it clockwise, lock the test button in the continuous operating position.
To release the lock turn the test button counterclockwise.
Never leave the test button locked down when not is use.

● Principle of Continuity Testing (Resistance Test)

Resistance value can be obtained by applying a certain current to the resistance under test and measuring the voltage generated on the both sides of the resistance under test.

Resistance Value = Voltage / Current

RX = V / I

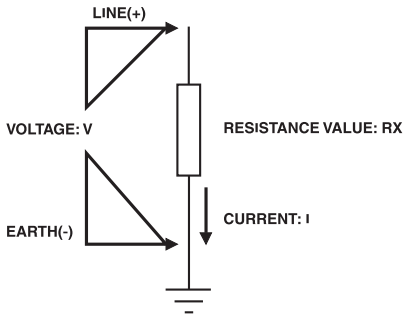

7. Battery & Fuse Replacement

⚠ DANGER

- Never open the battery compartment cover when making measurement.
  To avoid possible electrical shock, disconnect the test probe before opening the cover for battery and fuse replacement.

7-1 Battery Replacement

① Disconnect the test probe from the instrument.
② Open the battery compartment cover by unscrewing the metal captive screw to reveal battery compartment. Always replace all six batteries with new ones at the same time.
Battery type: 6 x 1.5V battery type R6P, 1.5V AA or equivalent
③ Screw the battery compartment lid back on before using the instrument.

7-2 Fuse Replacement

① Disconnect the test probe from the instrument.
② Open the battery compartment cover by unscrewing the metal captive screw to reveal battery compartment and replace the fuse.
Fuse type: 500mA/600V (F) quick acting ceramic fuse 6.35x3.mm
③ Screw the battery compartment lid back on before using the instrument.

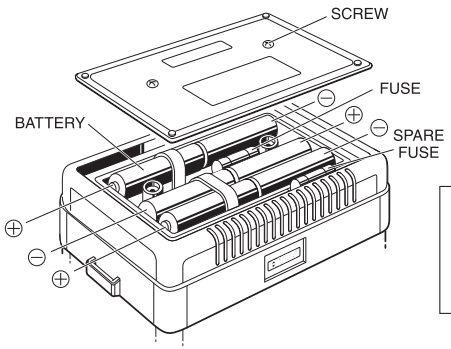

⚠ CAUTION

Instoll batteries correct polarity as marked inside.

8. Notes on Accessories

8-1 Case Lid

The case can be fitted under the housing case as illustrated bellow.

① Open the case lid as shown.

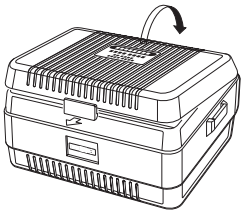

② Turn it 180 degrees.

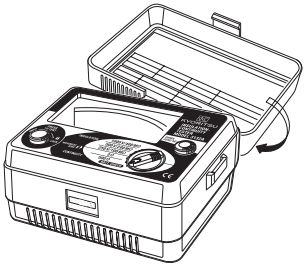

③ Put the case lid under
The housing case.

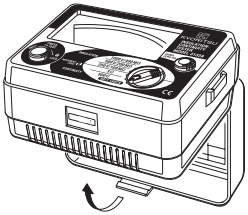

④ Hook it on housing case.

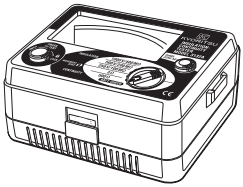

8-2 How to fit Neck Strap & Test Probe Pouch

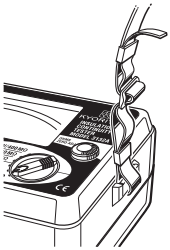

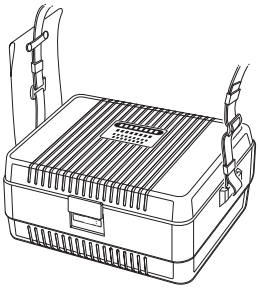

9. Cleaning of the instrument

Cleaning the meter cover

This tester is managed by our company ' s quality standard and is delivered in the best condition after passed the inspection. But in the dry time of winter static electricity sometimes builds up on the meter cover due to the characteristic of plastic.

When the pointer deflects by touching the surface of this tester or zero adjustment can not be made, do not try to make measurement.

When static electricity builds up on the meter cover and affects the meter reading, use a cloth dampened with off-the shelf anti-statics agent or detergent to wipe the meter cover surface.

10. Service

If this tester should fall to operate correctly, return it to your nearest distributors starting the exact nature of the fault.

Before returning the unit, make sure that:

a) operating instructions have been followed
b) Leads have been inspected
c) Fuse has been checked
d) Battery has been checked
e) The unit is returned with all accessory leads

Remember, the more information written about the fault, the quicker it will be serviced.

Major Tech reserves the rights to change specifications or designs described in this manual without notice and without obligations.

MAJOR TECH (PTY) LTD

T9 Industrial Village, 7 Sam Green Road,
Tunney Ext. 9, Elandsfontein,
South Africa
P.O. Box 888, Isando 1600,
South Africa

Telephone: +27 11 872 5500
National Contact Number: 08 61 62 5678
E-mail: sales@major-tech.com

www.major-tech.com